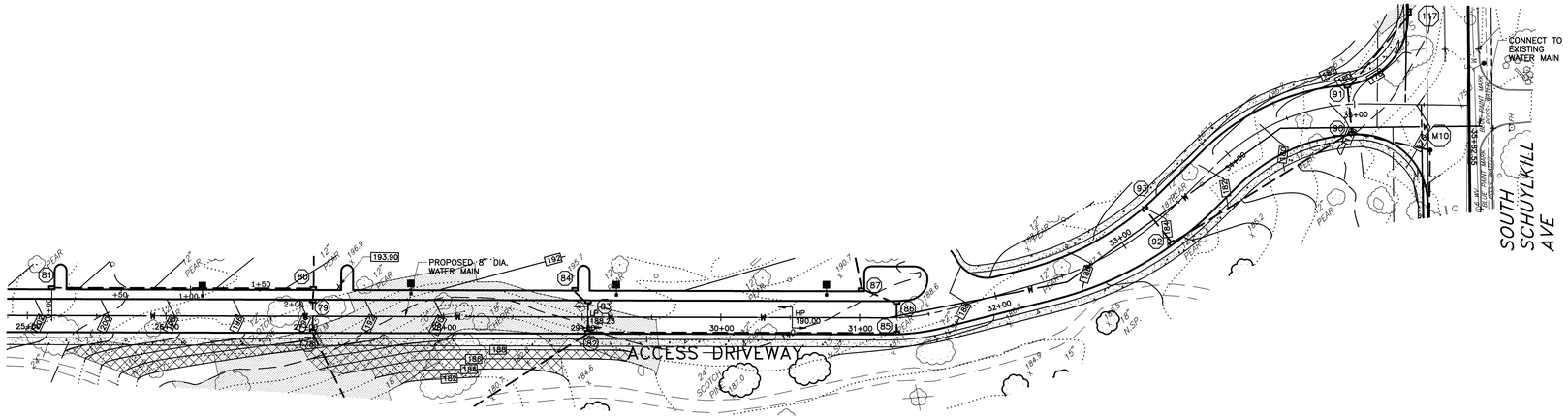

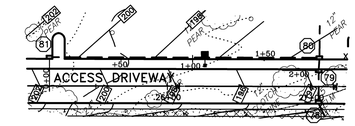

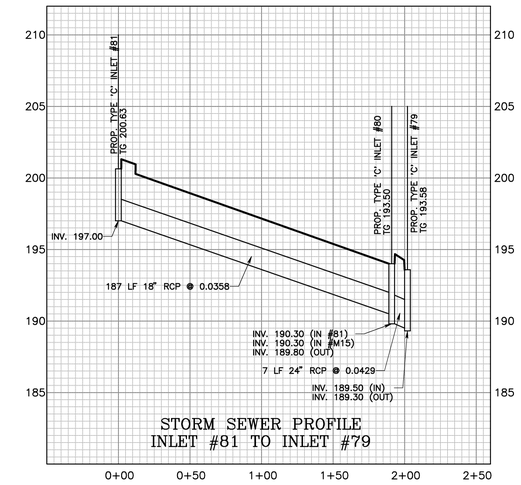

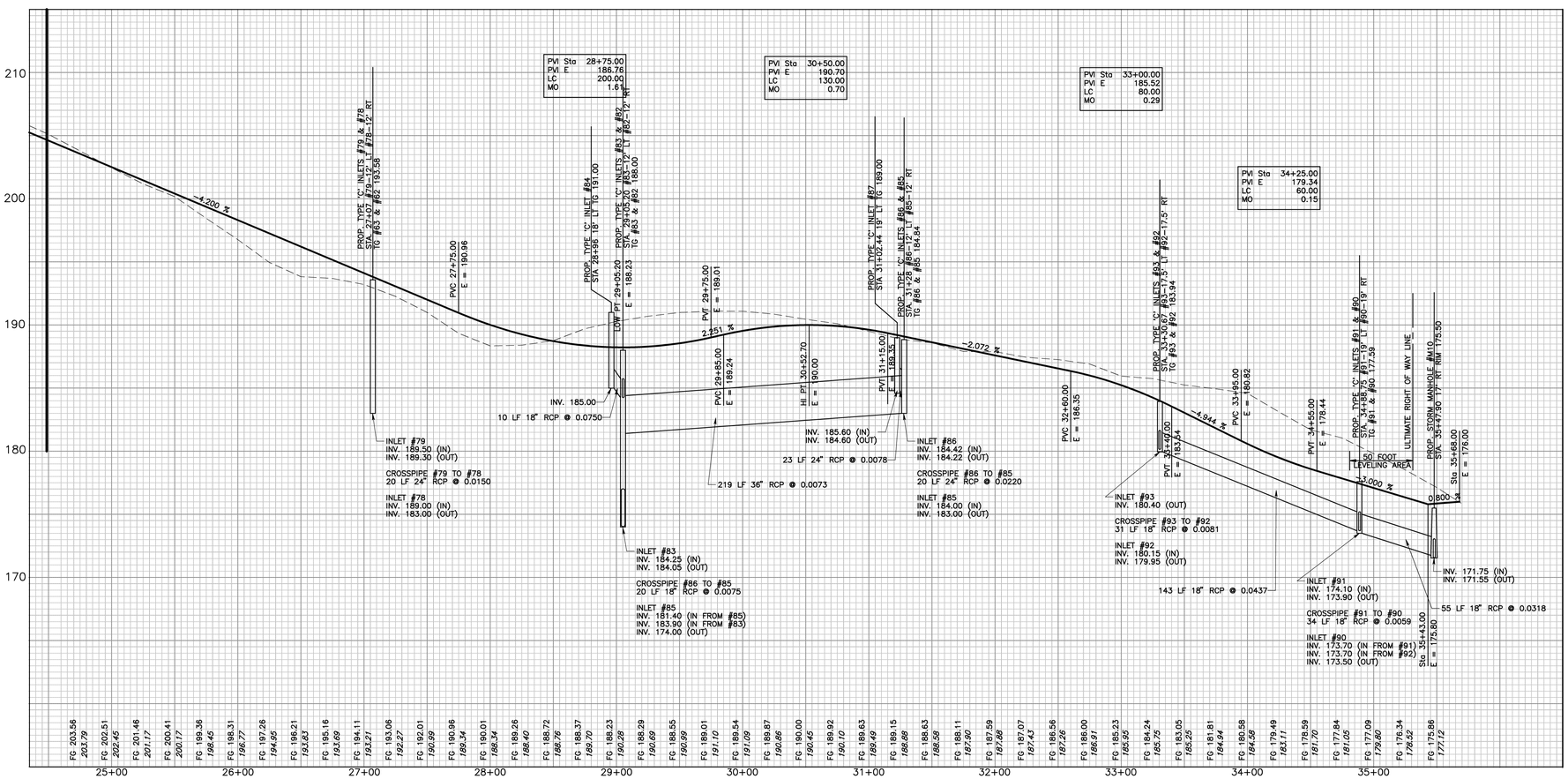

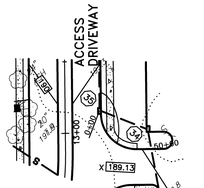

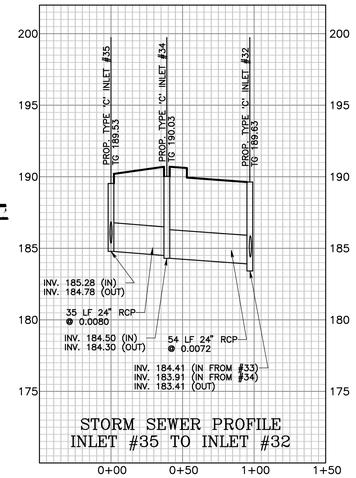

PRELIMINARY PLAN
ROAD PROFILE SHEET

1	9-28-15	REVISED PER TOWNSHIP CONSULTANT REVIEW COMMENTS

LAND DEVELOPMENT PLAN
FOR
WESTOVER SPORTING COMPLEX

WEST NORRITON TOWNSHIP — MONTGOMERY COUNTY, PA.

Edward B. Walsh & Associates, Inc.
CIVIL ENGINEERS & SURVEYORS
LIONVILLE PROFESSIONAL CENTER
125 Dowlin Forge Road
Exton, Pennsylvania 19341
Phone (610) 903-0060
Fax (610) 903-0080

Project–	2769
Date–	12-23-14
Scale–	H. 1"= 50' V. 1"= 5'
Drawn–	SLM
Checked–	A.J.B.
Sheet–	48 OF 65
Plotted: 9/25/2015	*File:* F:\JB\2769\FPS\2769-SPORTS-4.pro
Ver.–	000