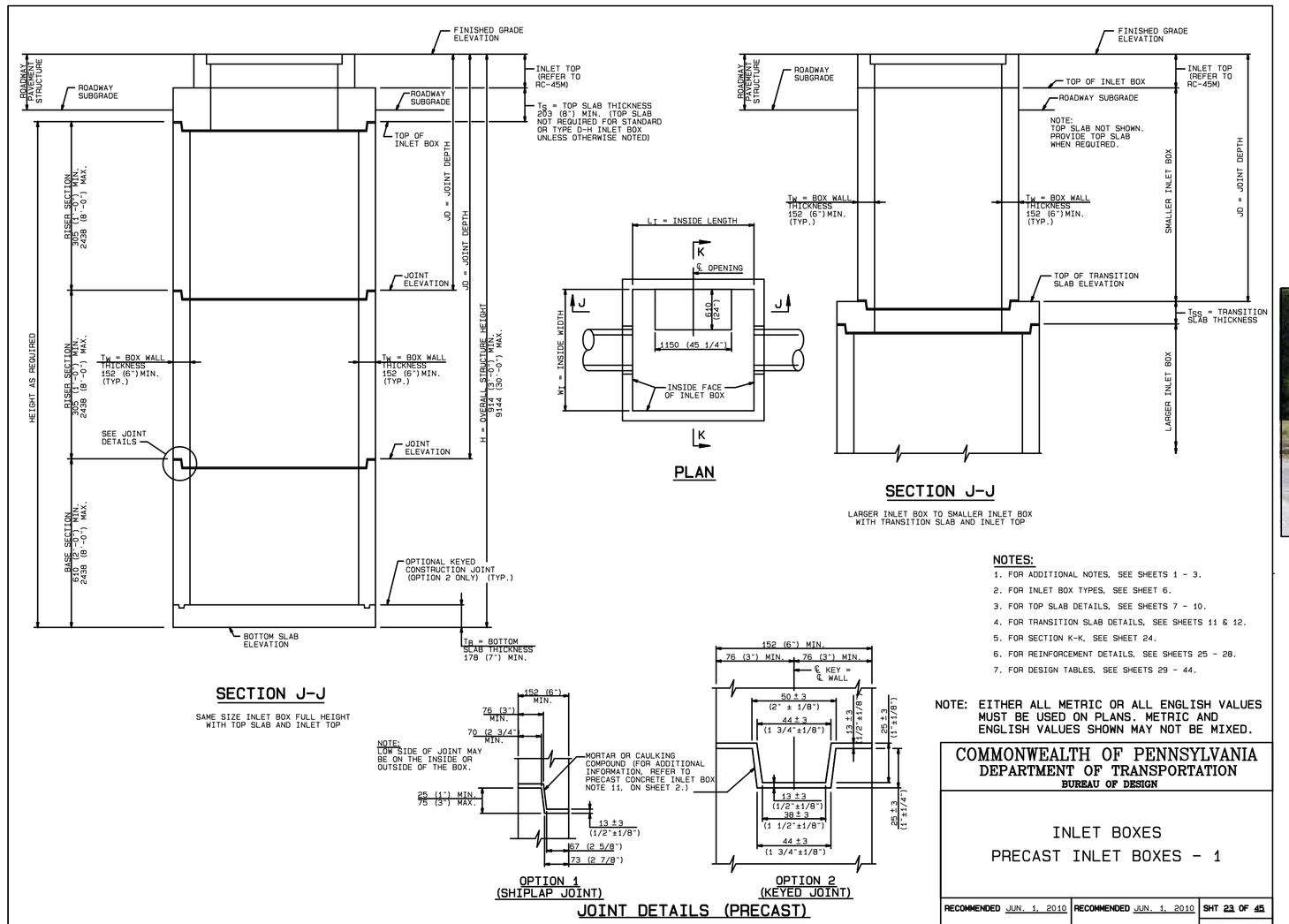

NOTES:

1. FOR ADDITIONAL NOTES, SEE SHEETS 1 - 3.
2. FOR INLET BOX TYPES, SEE SHEET 6.
3. FOR TOP SLAB DETAILS, SEE SHEETS 7 - 10.
4. FOR TRANSITION SLAB DETAILS, SEE SHEETS 11 & 12.
5. FOR SECTION K-K, SEE SHEET 24.
6. FOR REINFORCEMENT DETAILS, SEE SHEETS 25 - 28.
7. FOR DESIGN TABLES, SEE SHEETS 29 - 44.

NOTE: EITHER ALL METRIC OR ALL ENGLISH VALUES MUST BE USED ON PLANS. METRIC AND ENGLISH VALUES SHOWN MAY NOT BE MIXED.

COMMONWEALTH OF PENNSYLVANIA
DEPARTMENT OF TRANSPORTATION
BUREAU OF DESIGN

INLET BOXES
PRECAST INLET BOXES - 1

RECOMMENDED JUN. 1, 2010	RECOMMENDED JUN. 1, 2010	SHT 23 OF 46
CHIEF, HWY. QA DIVISION	DIRECTOR, BUREAU OF DESIGN	RC-46M

TUBULAR METAL GATE

SPECIFICATIONS TO BE PROVIDED ON FINAL PLANS

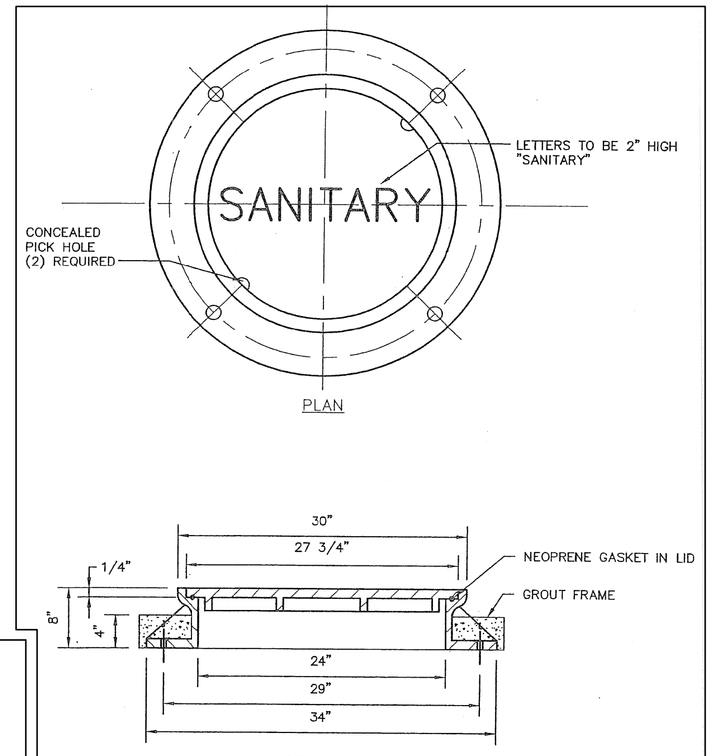

NOTE:
MANHOLE FRAME AND COVER PATTERN QUIRIN MHR-701 TO BE MFG. BY E.A. QUIRIN FOUNDRY CO. NEENAH 1642C OR APPROVED EQUAL

STANDARD MANHOLE FRAME & COVER
NO SCALE

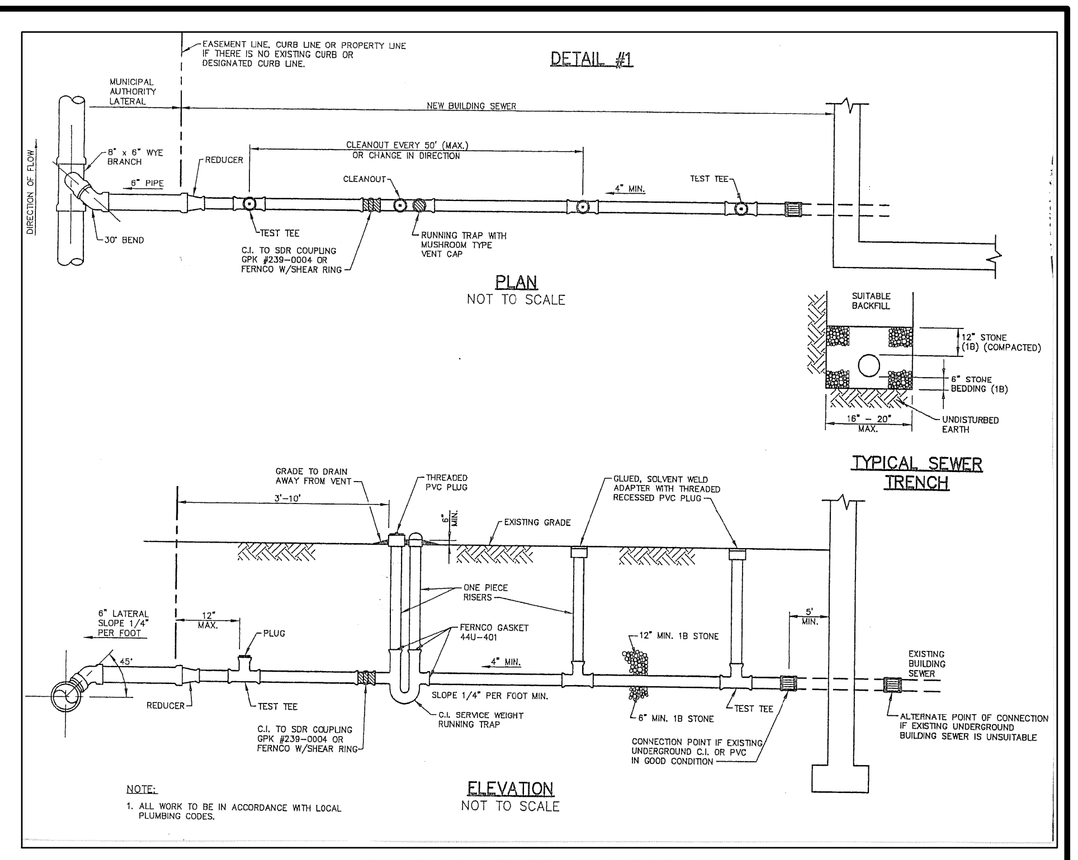

NOTE:
1. ALL WORK TO BE IN ACCORDANCE WITH LOCAL PLUMBING CODES.

BUILDING SEWER CONNECTION
(SDR SYSTEM SHOWN)

D	L	W	A
15"	3.5'	3.0'	12"
18"	4.0'	3.0'	12"
21"	4.5'	3.0'	12"
24"	5.0'	3.5'	12"
30"	5.5'	4.0'	12"
36"	5.8'	4.6'	12"
42"	6.3'	5.8'	12"
48"	6.9'	6.9'	12"
54"	7.5'	8.0'	12"
60"	8.1'	9.0'	15"
72"	9.2'	11.5'	15"

NOTES: CONCRETE TO BE PENNDOT CLASS "A" THROUGHOUT. CHAMFER ALL EXPOSED EDGES 1". ALL JOINTS SHALL BE FILLED WITH NON-EXTRUDING PRE-MOULDED EXPANSION FILLER.

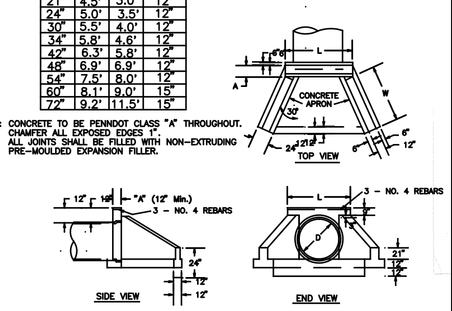

TYPE D-W ENDWALL
NOT TO SCALE

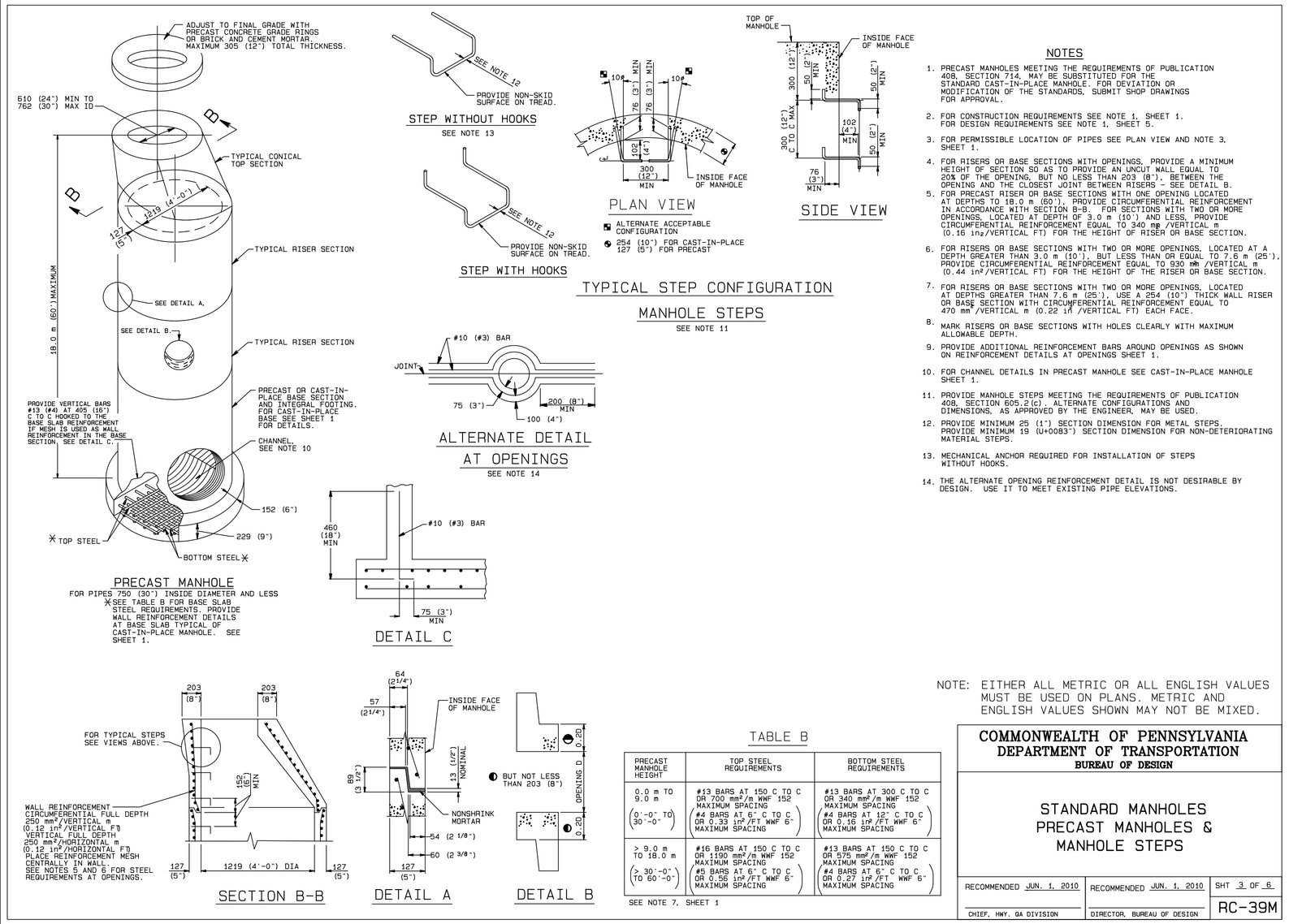

NOTES

1. PRECAST MANHOLES MEETING THE REQUIREMENTS OF PUBLICATION 408, SECTION 714, MAY BE SUBSTITUTED FOR THE STANDARD CAST-IN-PLACE MANHOLE. FOR DEVIATION OR MODIFICATION OF THE STANDARDS, SUBMIT SHOP DRAWINGS FOR APPROVAL.
2. FOR CONSTRUCTION REQUIREMENTS SEE NOTE 1, SHEET 1. FOR DESIGN REQUIREMENTS SEE NOTE 1, SHEET 5.
3. FOR PERMISSIBLE LOCATION OF PIPES SEE PLAN VIEW AND NOTE 3, SHEET 1.
4. FOR RISERS OR BASE SECTIONS WITH OPENINGS, PROVIDE A MINIMUM HEIGHT OF SECTION SO AS TO PROVIDE AN UNCUT WALL EQUAL TO 20% OF THE OPENING, BUT NO LESS THAN 203 (8"), BETWEEN THE OPENING AND THE CLOSEST JOINT BETWEEN RISERS - SEE DETAIL B.
5. FOR PRECAST RISER OR BASE SECTIONS WITH ONE OPENING LOCATED AT DEPTHS TO 18.0 m (60'), PROVIDE CIRCUMFERENTIAL REINFORCEMENT EQUAL TO 250 mm²/m (0.12 in²/FT) FOR THE HEIGHT OF RISER OR BASE SECTION. FOR RISERS OR BASE SECTIONS WITH ONE OPENING LOCATED AT DEPTH OF 18.0 m (60') AND LESS, PROVIDE CIRCUMFERENTIAL REINFORCEMENT EQUAL TO 340 mm²/VERTICAL m (0.16 in²/VERTICAL FT) FOR THE HEIGHT OF RISER OR BASE SECTION.
6. FOR RISERS OR BASE SECTIONS WITH TWO OR MORE OPENINGS, LOCATED AT A DEPTH GREATER THAN 3.0 m (10'), BUT LESS THAN OR EQUAL TO 7.6 m (25'), PROVIDE CIRCUMFERENTIAL REINFORCEMENT EQUAL TO 930 mm²/VERTICAL m (0.44 in²/VERTICAL FT) FOR THE HEIGHT OF THE RISER OR BASE SECTION.
7. FOR RISERS OR BASE SECTIONS WITH TWO OR MORE OPENINGS, LOCATED AT A DEPTH GREATER THAN 7.6 m (25'), USE A 254 (10") THICK WALL RISER OR BASE SECTION WITH CIRCUMFERENTIAL REINFORCEMENT EQUAL TO 470 mm²/VERTICAL m (0.22 in²/VERTICAL FT) EACH FACE.
8. MARK RISERS OR BASE SECTIONS WITH HOLES CLEARLY WITH MAXIMUM ALLOWABLE DEPTH.
9. PROVIDE ADDITIONAL REINFORCEMENT BARS AROUND OPENINGS AS SHOWN ON REINFORCEMENT DETAILS AT OPENINGS SHEET 1.
10. FOR CHANNEL DETAILS IN PRECAST MANHOLE SEE CAST-IN-PLACE MANHOLE SHEET 1.
11. PROVIDE MANHOLE STEPS MEETING THE REQUIREMENTS OF PUBLICATION 408, SECTION 605.2(c). ALTERNATE CONFIGURATIONS AND DIMENSIONS, AS APPROVED BY THE ENGINEER, MAY BE USED.
12. PROVIDE MINIMUM 25 (1") SECTION DIMENSION FOR METAL STEPS. PROVIDE MINIMUM 19 (UA0083") SECTION DIMENSION FOR NON-DETERIORATING MATERIAL STEPS.
13. MECHANICAL ANCHOR REQUIRED FOR INSTALLATION OF STEPS WITHOUT HOOKS.
14. THE ALTERNATE OPENING REINFORCEMENT DETAIL IS NOT DESIRABLE BY DESIGN. USE IT TO MEET EXISTING PIPE ELEVATIONS.

TABLE B

PRECAST MANHOLE HEIGHT	TOP STEEL REQUIREMENTS	BOTTOM STEEL REQUIREMENTS
0.0 m TO 9.0 m (0'-0" TO 30'-0")	#13 BARS AT 150 C TO C OR 150 mm²/m WWF 152 MAXIMUM SPACING (#4 BARS AT 6" C TO C OR 0.33 in²/FT WWF 6" MAXIMUM SPACING)	#13 BARS AT 300 C TO C OR 340 mm²/m WWF 152 MAXIMUM SPACING (#4 BARS AT 12" C TO C OR 0.16 in²/FT WWF 6" MAXIMUM SPACING)
> 9.0 m TO 18.0 m (> 30'-0" TO 60'-0")	#16 BARS AT 150 C TO C OR 190 mm²/m WWF 152 MAXIMUM SPACING (#5 BARS AT 6" C TO C OR 0.56 in²/FT WWF 6" MAXIMUM SPACING)	#13 BARS AT 150 C TO C OR 575 mm²/m WWF 152 MAXIMUM SPACING (#4 BARS AT 6" C TO C OR 0.27 in²/FT WWF 6" MAXIMUM SPACING)

SEE NOTE 7, SHEET 1

NOTE: EITHER ALL METRIC OR ALL ENGLISH VALUES MUST BE USED ON PLANS. METRIC AND ENGLISH VALUES SHOWN MAY NOT BE MIXED.

COMMONWEALTH OF PENNSYLVANIA
DEPARTMENT OF TRANSPORTATION
BUREAU OF DESIGN

STANDARD MANHOLES
PRECAST MANHOLES &
MANHOLE STEPS

RECOMMENDED JUN. 1, 2010	RECOMMENDED JUN. 1, 2010	SHT 3 OF 6
CHIEF, HWY. QA DIVISION	DIRECTOR, BUREAU OF DESIGN	RC-39M

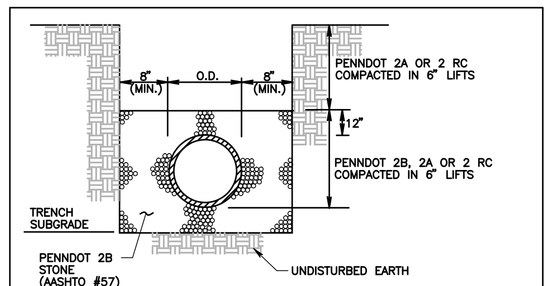

GRAVITY SANITARY SEWERS

NOTE:
CONTRACTOR TO COMPLY WITH CURRENT OSHA STANDARD 29 CFR 1926 FOR TRENCH DIMENSIONS, SLOPING, BENCHING, SHORING AND INSPECTIONS.

BEDDING DETAILS
NO SCALE

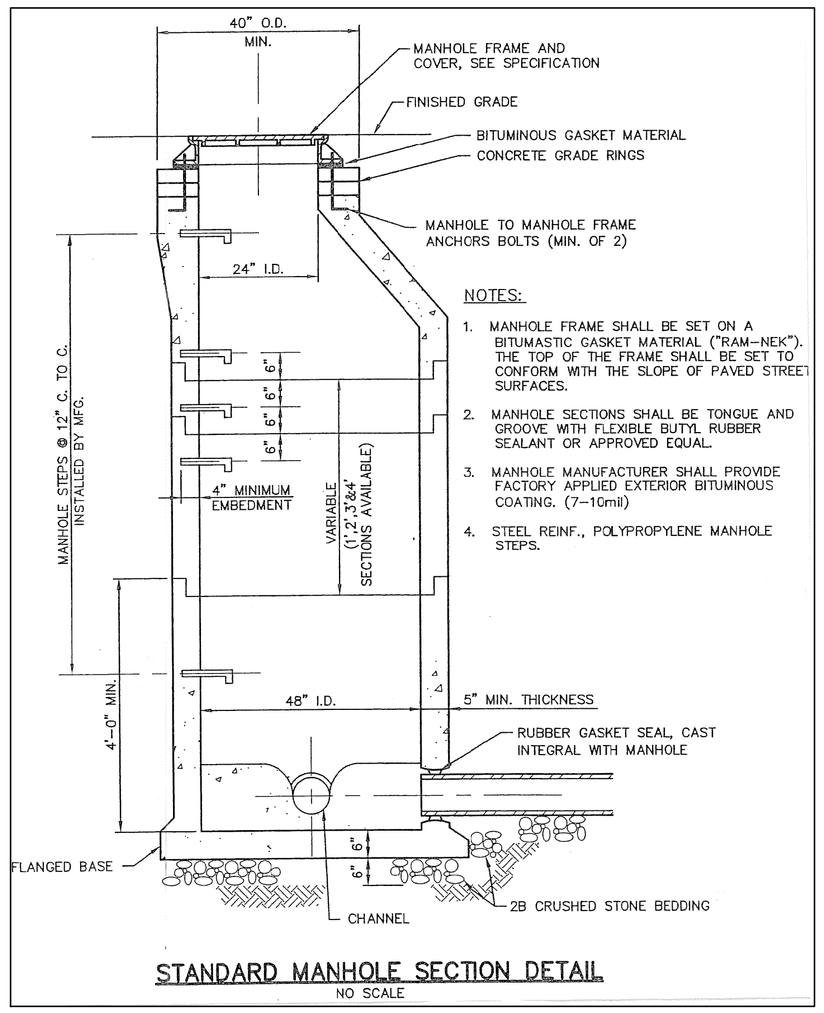

NOTES:

1. MANHOLE FRAME SHALL BE SET ON A BITUMASTIC GASKET MATERIAL ("RAM-NEK"). THE TOP OF THE FRAME SHALL BE SET TO CONFORM WITH THE SLOPE OF PAVED STREET SURFACES.
2. MANHOLE SECTIONS SHALL BE TONGUE AND GROOVE WITH FLEXIBLE BUTYL RUBBER SEALANT OR APPROVED EQUAL.
3. MANHOLE MANUFACTURER SHALL PROVIDE FACTORY APPLIED EXTERIOR BITUMINOUS COATING. (7-10mil)
4. STEEL REINF., POLYPROPYLENE MANHOLE STEPS.

STANDARD MANHOLE SECTION DETAIL
NO SCALE

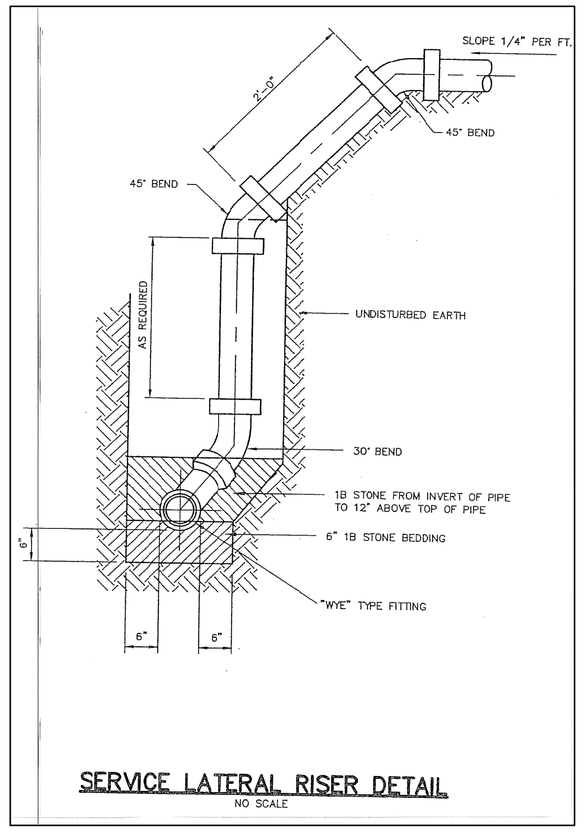

SERVICE LATERAL RISER DETAIL
NO SCALE

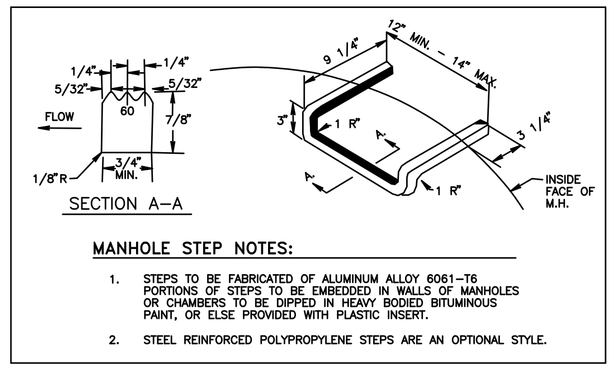

MANHOLE STEP NOTES:

1. STEPS TO BE FABRICATED OF ALUMINUM ALLOY 6061-T6 PORTIONS OF STEPS TO BE EMBEDDED IN WALLS OF MANHOLES OR CHAMBERS TO BE DIPPED IN HEAVY BODIED BITUMINOUS PAINT, OR ELSE PROVIDED WITH PLASTIC INSERT.
2. STEEL REINFORCED POLYPROPYLENE STEPS ARE AN OPTIONAL STYLE.

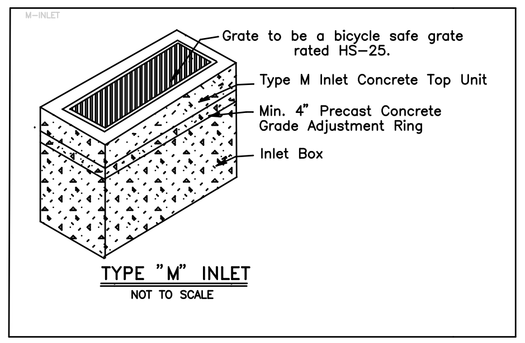

TYPE "M" INLET
NOT TO SCALE

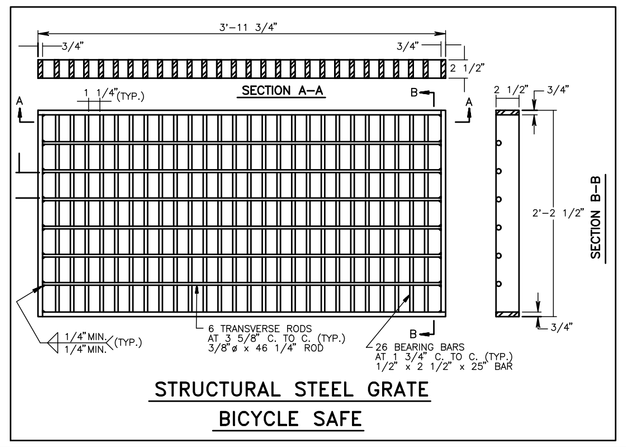

STRUCTURAL STEEL GRATE
BICYCLE SAFE

PRELIMINARY PLAN
DETAIL SHEET

1	9-28-15	REVISED PER TOWNSHIP CONSULTANT REVIEW COMMENTS

LAND DEVELOPMENT PLAN
FOR
WESTOVER SPORTING COMPLEX
WEST NORRITON TOWNSHIP — MONTGOMERY COUNTY, PA.

Edward B. Walsh & Associates, Inc.
CIVIL ENGINEERS & SURVEYORS
LIONVILLE PROFESSIONAL CENTER
125 Dowlin Forge Road
Exton, Pennsylvania 19341
Phone (610) 903-0060
Fax (610) 903-0080

Project-	2769
Date-	12-23-14
Scale-	N/A
Drawn-	SLM
Checked-	A.J.B.
Sheet-	62 OF 65
Ver.-	000

Plotted: 9/25/2015 File: F:\JB\2769\FPS\2769-SPORTS-4.pro