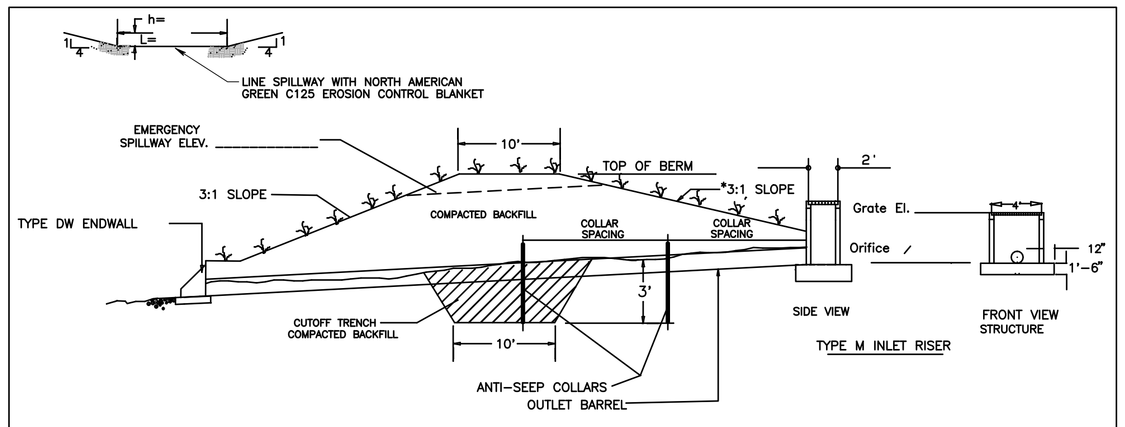

TYPICAL BASIN EMBANKMENT CROSS SECTION

Not to Scale

DETENTION BASIN TABULATION

BASIN#	TOP OF BERM ELEV.	EMERGENCY SPILLWAY ELEV.	EMERGENCY SPILLWAY WIDTH	RISER GRATE ELEV.	ORIFICE SIZE AND ELEV.	BARREL SIZE AND TYPE	BARREL LENGTH	BARREL SLOPE	BARREL INV (IN)	BARREL INV. (OUT)	BASIN BOTTOM
SWM 1	110.90	109.40	74.00'	108.50	10" @ 102.00 18" @ 105.00	24" RCP	75'	0.0133	102.00	100.00	102.00
SWM 2	152.10	150.25	51.00'	149.00	12" @ 142.25 16" @ 146.00	24" RCP	94'	0.0093	142.25	141.38	142.25
SWM 3	165.00	163.05	15.00'	162.50	6" @ 158.00	18" RCP	175'	0.0571	158.00	148.00	158.00
SWM 4	162.00	160.45	107.00'	158.60	16" @ 153.00 18" @ 156.50	36" RCP	58'	0.0100	153.00	152.42	153.00
MODIFIED POND (SWM 5)	175.50	174.35	90.00'	N/A	4" @ 173.10	4" PVC	30' EXISTING	0.0100	173.10	172.80	165.00

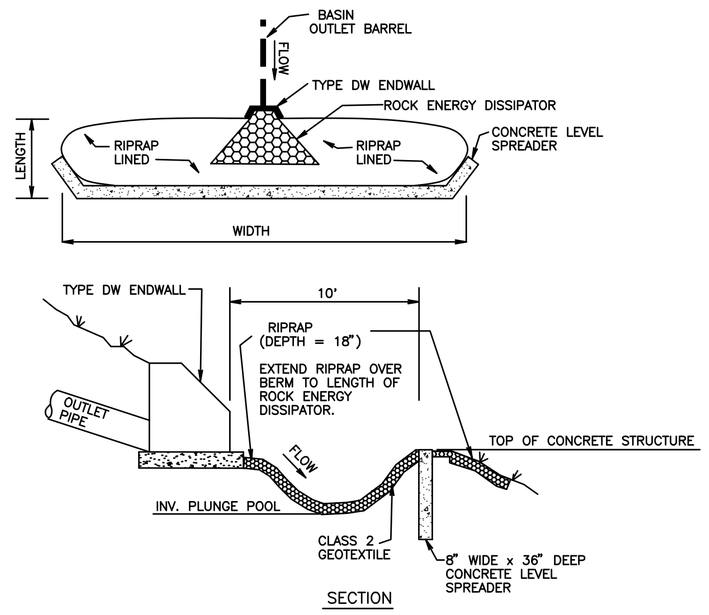

R-4 RIPRAP LINED PLUNGE POOL LEVEL SPREADER DETAIL

NOT TO SCALE

PLUNGE POOL NO.	INV. BARREL OUTLET	INV. OF PLUNGE POOL	TOP OF CONCRETE STRUCTURE	POOL WIDTH	POOL LENGTH	RIP-RAP SIZE
1	101.25	99.00	101.15	45'	70'	9"

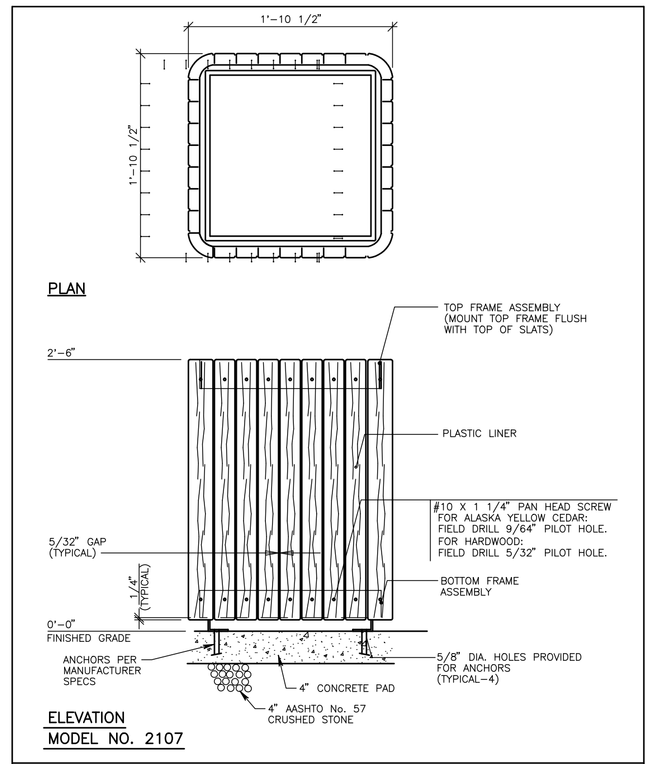

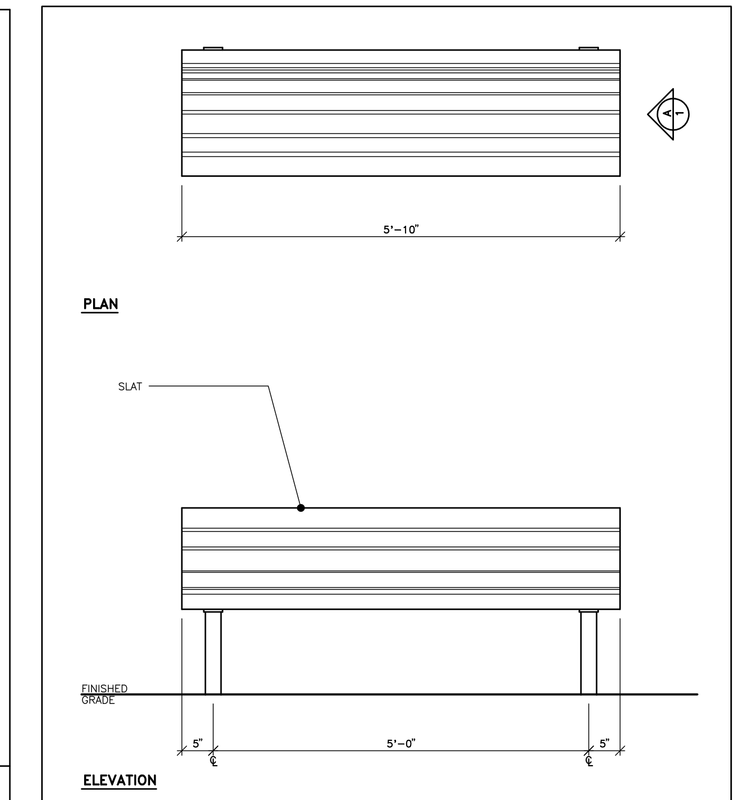

COLUMBIA CASCADE COMPANY
Makers of TimberForm®, PipeLine® TimberForm®-2 and CycLoops® Products.
1975 S.W. Fifth Avenue, Portland, Oregon 97201-5293, U.S.A.
Telephone 503/223-1157, Facsimile 503/223-4530

Title: **TIMBERFORM GREENWAY MODEL NO. 2140-6 CONTOUR BENCH**

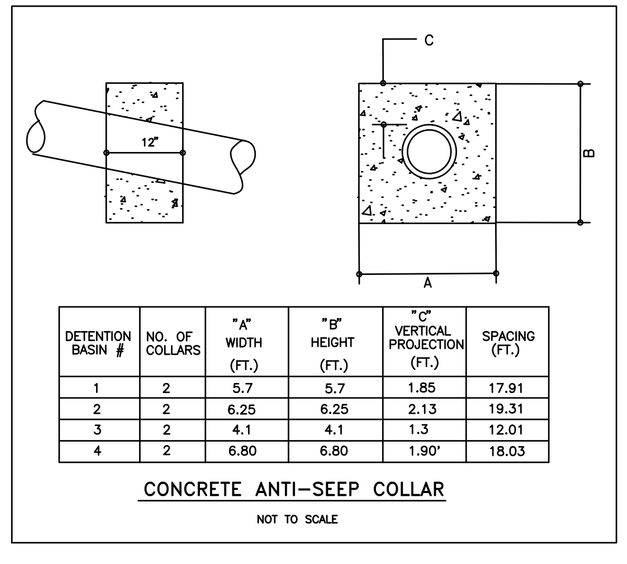

DETENTION BASIN #	NO. OF COLLARS	"A" WIDTH (FT.)	"B" HEIGHT (FT.)	"C" VERTICAL PROJECTION (FT.)	SPACING (FT.)
1	2	5.7	5.7	1.85	17.91
2	2	6.25	6.25	2.13	19.31
3	2	4.1	4.1	1.3	12.01
4	2	6.80	6.80	1.90'	18.03

CONCRETE ANTI-SEEP COLLAR

NOT TO SCALE

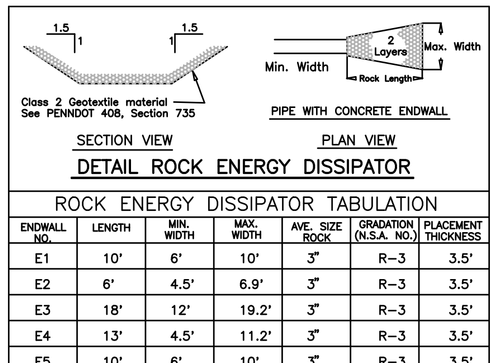

DETAIL ROCK ENERGY DISSIPATOR

ROCK ENERGY DISSIPATOR TABULATION

ENDWALL NO.	LENGTH	MIN. WIDTH	MAX. WIDTH	AVE. SIZE ROCK	GRADATION (N.S.A. NO.)	PLACEMENT THICKNESS
E1	10'	6'	10'	3"	R-3	3.5'
E2	6'	4.5'	6.9'	3"	R-3	3.5'
E3	18'	12'	19.2'	3"	R-3	3.5'
E4	13'	4.5'	11.2'	3"	R-3	3.5'
E5	10'	6'	10'	3"	R-3	3.5'
E6	28'	7.5'	18.7'	3"	R-4	4.25'
E7	12'	9'	13.8'	3"	R-3	3.5'
E8	26'	9'	35'	3"	R-5	5.25'
E9	14'	6'	11.6'	3"	R-3	3.5'
E10	17'	6'	12.8'	3"	R-3	3.5'
E11	12'	9'	13.8'	3"	R-3	3.5'
E12	8'	4.5'	12.5'	3"	R-3	3.5'

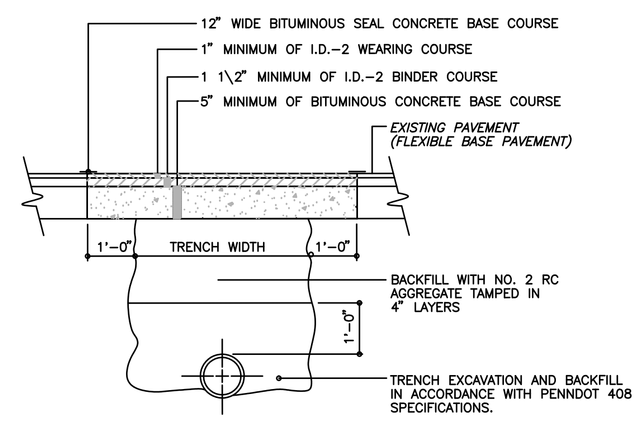

PERMANENT PAVEMENT REPLACEMENT

PAVEMENT RESTORATION DETAIL

NOT TO SCALE

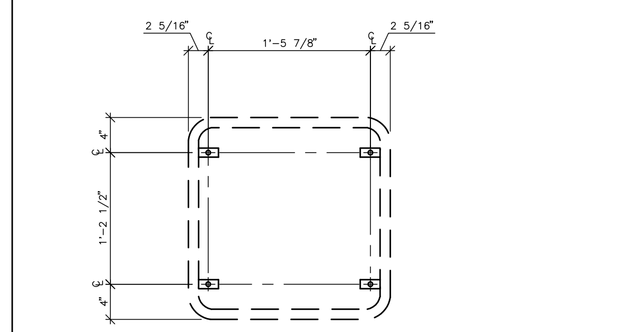

COLUMBIA CASCADE COMPANY
Makers of TimberForm®, PipeLine® TimberForm®-2 and CycLoops® Products.
1975 S.W. Fifth Avenue, Portland, Oregon 97201-5293, U.S.A.
Telephone 503/223-1157, Facsimile 503/223-4530

Title: **TIMBERFORM RESTORATION MODEL NO. 2107 LITTER CONTAINER**

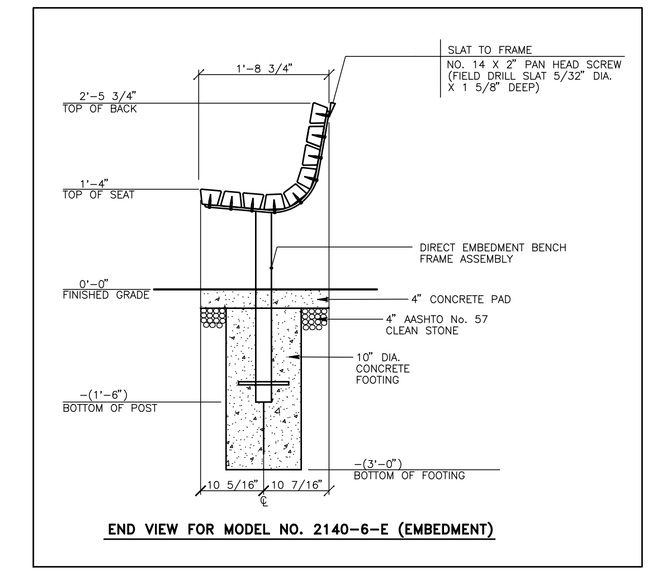

END VIEW FOR MODEL NO. 2140-6-E (EMBEDMENT)

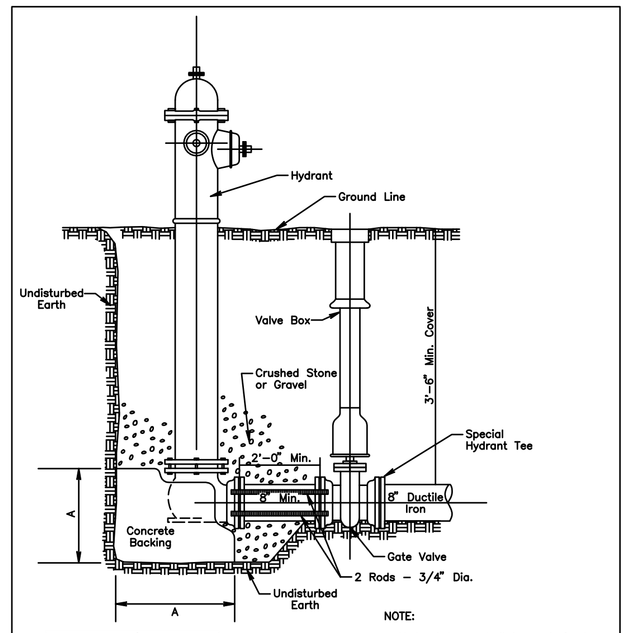

DESIGN PRESSURE (psi)	AREA A (sq. ft.)
150	3
200	4
250	5

NOTE:
Hydrant base shall be restrained with tie rods and concrete reaction backings, in a manner approved by the Authority.

FIRE HYDRANT DETAIL

NOT TO SCALE

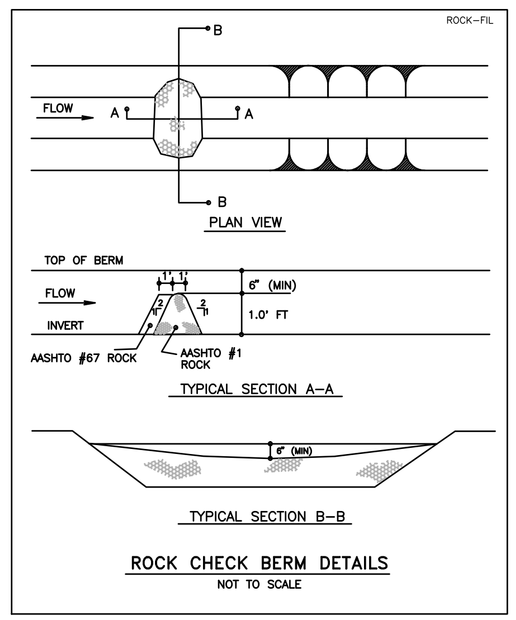

ROCK CHECK BERM DETAILS

NOT TO SCALE

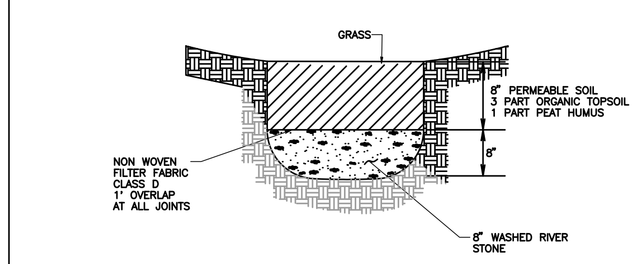

FOOTBALL AND SOCCER FIELD SOIL SUBSURFACE SYSTEM

NOT TO SCALE

EMERGENCY ACCESS DRIVE GATE DETAIL

NO SCALE

PRELIMINARY PLAN DETAIL SHEET

1 9-28-15 REVISED PER TOWNSHIP CONSULTANT REVIEW COMMENTS

LAND DEVELOPMENT PLAN FOR

WESTOVER SPORTING COMPLEX

WEST NORRITON TOWNSHIP — MONTGOMERY COUNTY, PA.

Edward B. Walsh & Associates, Inc.
CIVIL ENGINEERS & SURVEYORS
LIONVILLE PROFESSIONAL CENTER
125 Dowlin Forge Road
Exton, Pennsylvania 19341
Phone (610) 903-0060
Fax (610) 903-0080

Project-	2769
Date-	12-23-14
Scale-	N/A
Drawn-	SLM
Checked-	A.J.B.
Sheet-	58 OF 65
Ver.-	000

Plotted: 9/28/2015 *File:* F:\JB\2769\FPS\2769-SPORTS-4.pro