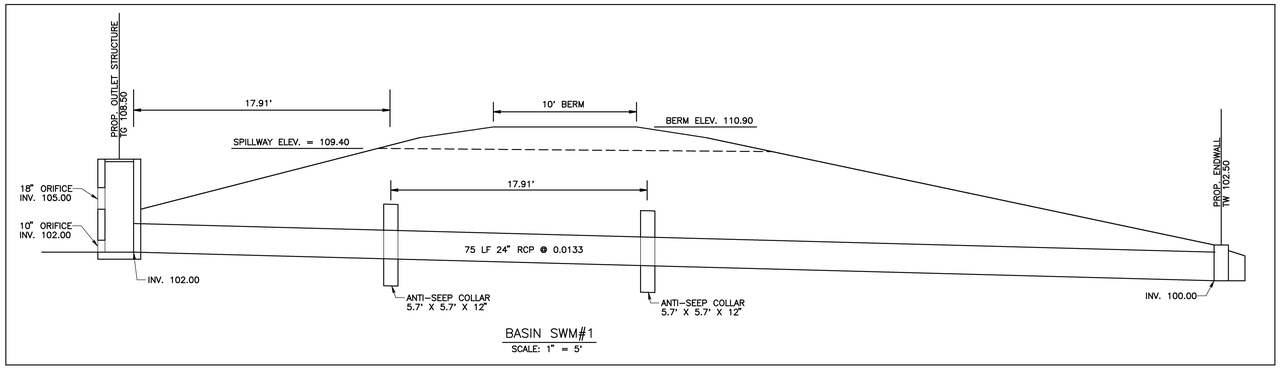

BASIN SWM#1
SCALE: 1" = 5'

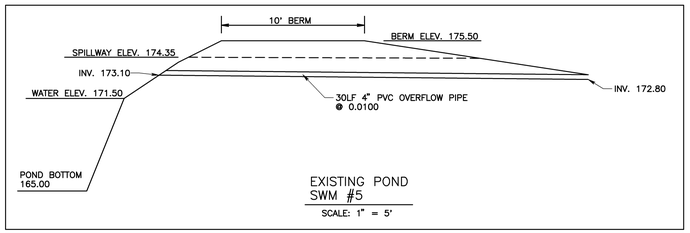

EXISTING POND
SWM #5
SCALE: 1" = 5'

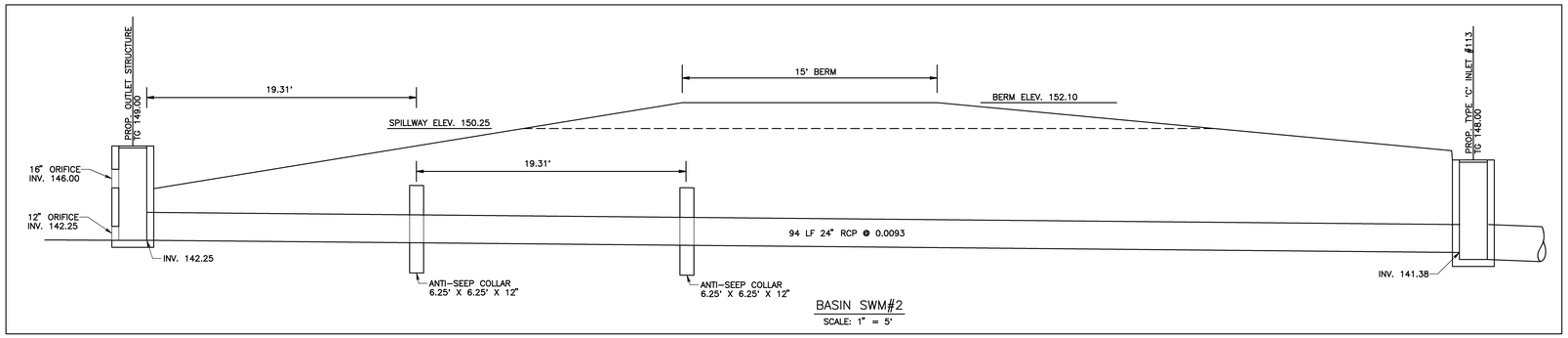

BASIN SWM#2
SCALE: 1" = 5'

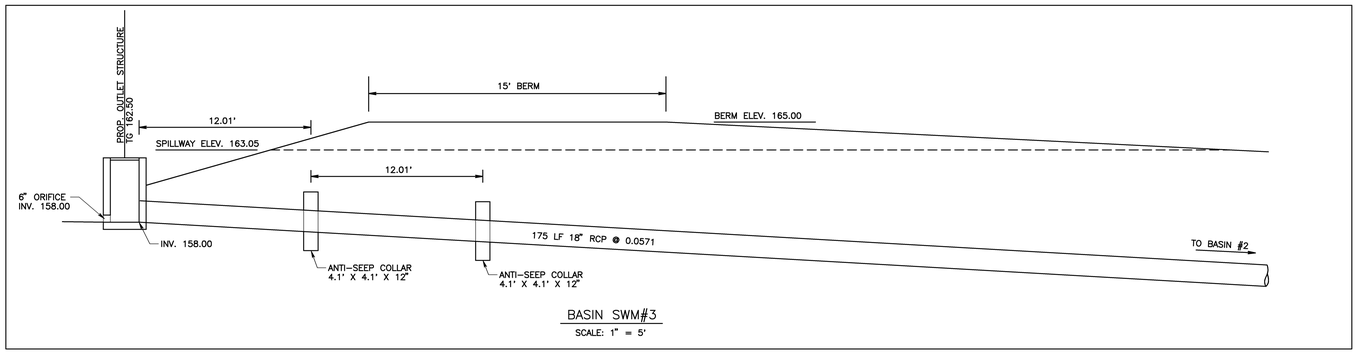

BASIN SWM#3
SCALE: 1" = 5'

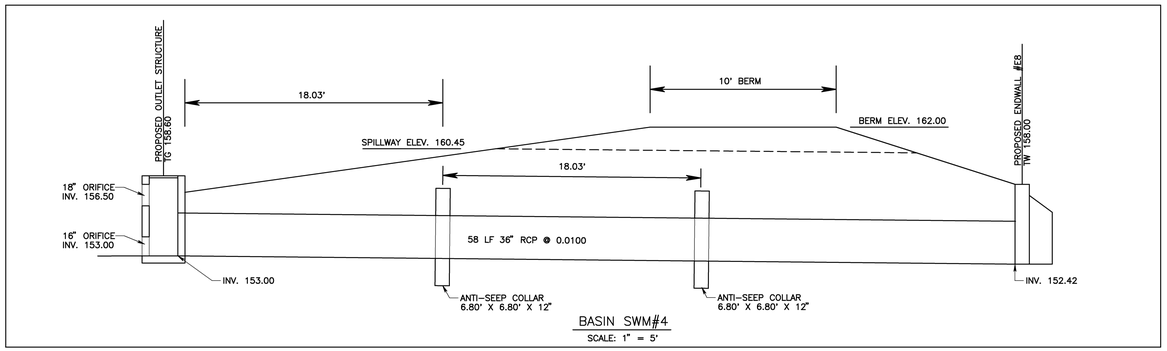

BASIN SWM#4
SCALE: 1" = 5'

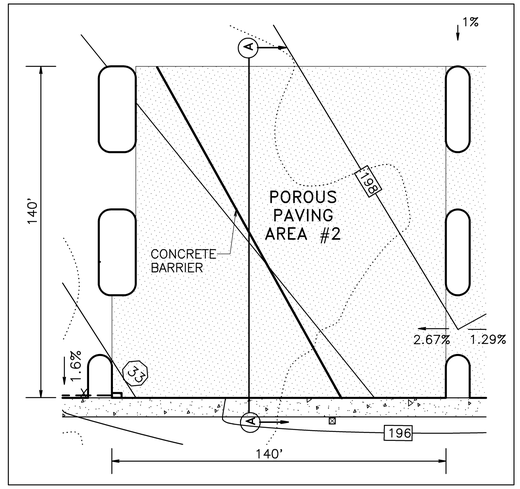

PLAN VIEW
POROUS PAVING AREA #2
SCALE: 1"=30'

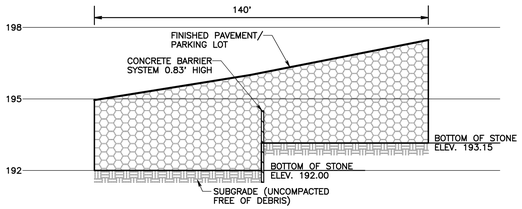

POROUS PAVING AREA #2
SCALE: H. 1"=30'
V. 1"=3'

PRELIMINARY PLAN DETAIL SHEET

1	9-28-15	REVISED PER TOWNSHIP CONSULTANT REVIEW COMMENTS

LAND DEVELOPMENT PLAN
FOR
WESTOVER SPORTING COMPLEX

WEST NORRITON TOWNSHIP — MONTGOMERY COUNTY, PA.

Edward B. Walsh & Associates, Inc.
CIVIL ENGINEERS & SURVEYORS
LIONVILLE PROFESSIONAL CENTER
125 Dowlin Forge Road
Exton, Pennsylvania 19341
Phone (610) 903-0060
Fax (610) 903-0080

Project-	2769
Date-	12-23-14
Scale-	AS NOTED
Drawn-	SLM
Checked-	A.J.B.
Sheet-	59 OF 65
Plotted: 9/25/2015	*File:* F:\JB\2769\FPS\2769-SPORTS-4.pro
Ver.-	000